Aiming Driving Support Systems

Supersedes version 5, dated September 2020, to revise the information highlighted in yellow

APPLIES TO

All models with the millimeter wave radar, FCW/LDW camera, multipurpose camera, multi-view camera, and blind spot information radar.

REVISION SUMMARY

Under WHEN AIMING IS REQUIRED, additional notes were added.

INTRODUCTION

Many Acura vehicles have advanced safety and driving support systems to help warn drivers and mitigate hazards. It is very important to be familiar with these systems and how to properly aim the camera or radar units. This job aid covers the function of each driving support system, the tools needed to properly aim the camera or radar unit, general requirements for aiming, and troubleshooting tips.

System	Abbreviation	Description
Adaptive Cruise Control	ACC	This system helps maintain a constant vehicle speed and a set following interval behind a vehicle detected ahead. For models with the added low speed follow (LSF) feature, if the vehicle ahead slows to a stop, the vehicle with LSF will slow down and come to a stop.
Auto High-Beam	AHB	This system can automatically switch the headlights from low beam to high beam using the multipurpose camera, depending on road conditions, oncoming vehicles, and vehicles ahead.
Blind Spot Information	BSI	This system can detect vehicles in specified alert zones next to the vehicle, particularly in harder-to-see areas commonly known as blind spots.
Collision Mitigation Braking System™	CMBS™	This system alerts you when there is a possibility of a frontal collision with a vehicle or pedestrian detected ahead. It also reduces vehicle speed to help minimize collision severity if a collision appears unavoidable.
Cross Traffic Monitor	CTM	This system monitors the rear corner areas using the BSI radar units when reversing and alerts you if a vehicle approaching from a rear corner is detected.
Forward Collision Warning	FCW	This system alerts you when it determines there is a possibility of a frontal collision with a vehicle detected ahead.

© 2021 American Honda Motor Co., Inc. — All Rights Reserved

System	Abbreviation	Description
Lane Departure Warning	LDW	This system alerts you when it determines the vehicle maybe unintentionally crossing over detected lane markings.
Lane Keeping Assist System	LKAS	This system provides steering input to help keep the vehicle in the middle of a detected lane and provides tactile and visual alerts if the vehicle is detected drifting out of its lane.
Multi View Camera System	MVCS	This system displays an image of harder-to-see areas commonly known as blind spots from different angles on the audio or audio-navigation screen using four cameras.
Road Departure Mitigation	RDM	This system detects if the vehicle is drifting too close to the side of the road without a turn signal and can provide mild steering input to keep the vehicle on the road or braking to help keep it from leaving the roadway entirely.
Traffic Jam Assist	TJA	This system adjusts the speed of the vehicle to maintain a set interval between the vehicle and the one detected ahead. It also applies steering torque to keep the vehicle in the center of the detected lane when driving in heavy traffic.

COMPONENT LOCATION

Millimeter Wave Radar

In general, the millimeter wave radar is mounted directly behind or below the front Acura emblem. On some models such as the MDX and TLX, it is mounted to the side, behind the front grille.

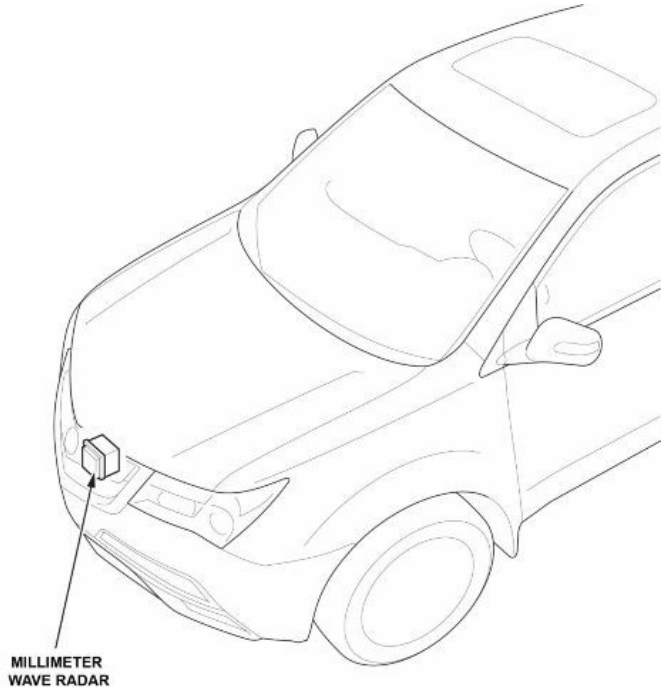

Multipurpose, FCW/LDW Cameras

Though different in function and control, the LKAS, multipurpose, or FCW/LDW camera is mounted right above the rearview mirror. Camera types will differ from model and year and may use two cameras (LKAS, FCW/LDW) for older models and one camera (multipurpose) for later models.

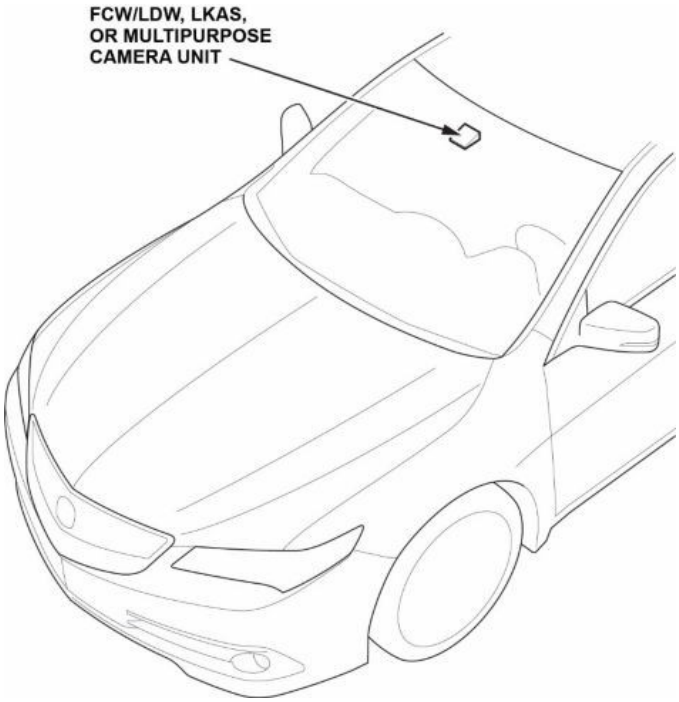

Multi View Camera System

The cameras used on this system are mounted on the front grille, left and right mirrors, and uses the rear view camera.

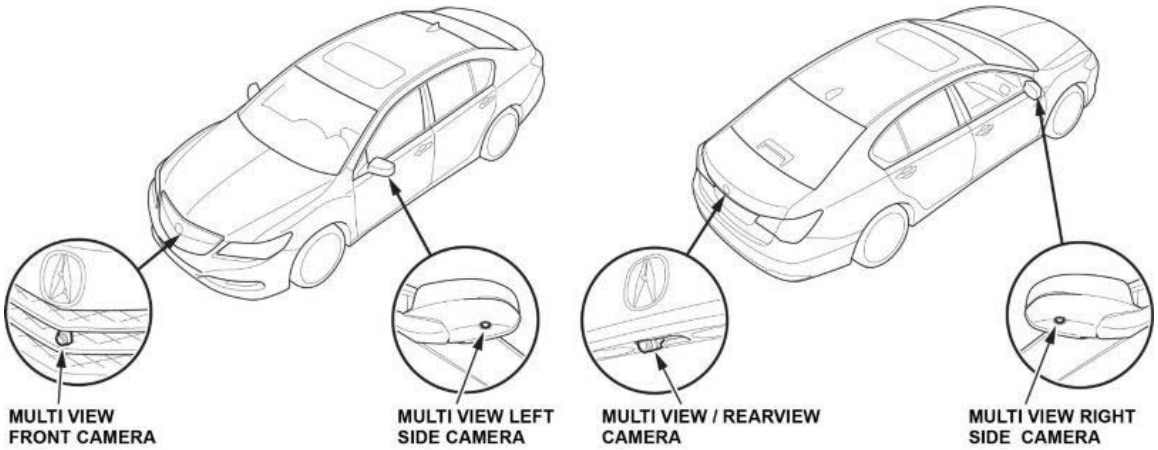

BSI Radar

The BSI radar units are installed on the left and right sides of the rear body panel behind the rear bumper. The mounting position of the BSI radar units can vary, depending on the model.

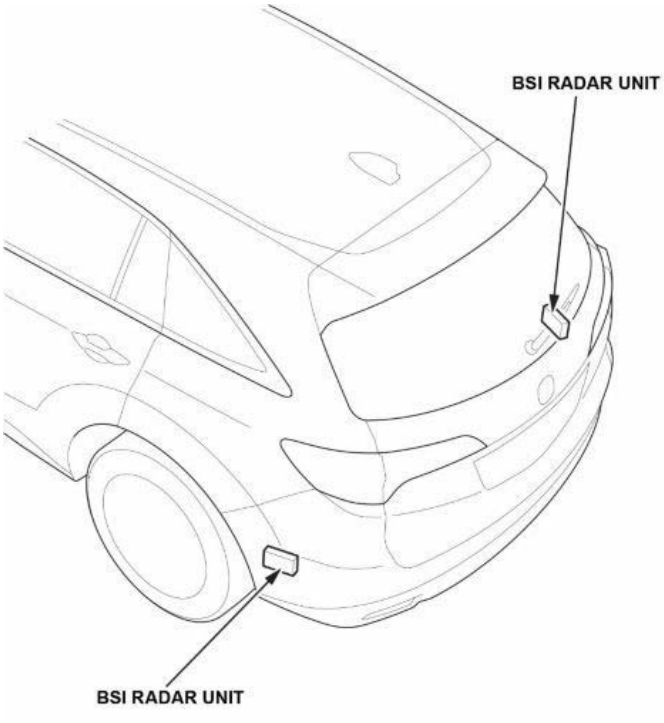

WHEN AIMING IS REQUIRED

Proper wheel alignment, body structural alignment, and camera/radar alignment are critical to the performance of driving support system functions on Acura vehicles.

NOTE:

- Always refer to the model-specific service manual along with the table below to determine when the radar or camera should be aimed. The table below may not list every type of collision repair that would require aiming a radar or camera. The necessity of aiming a radar or camera should be determined by the extent of the damage or repair made to the vehicle.
- If aiming a radar or camera is necessary due to a collision, then a four-wheel alignment check should be performed. If the wheel alignment is not within specifications, it should be corrected prior to aiming any camera or radar.
- Unless instructed by the service manual or available service information, camera and radar systems calibrations are NOT required after a wheel alignment.
- The requirement of a 4-wheel alignment should be a determined by the extent of the damage and repair made to the vehicle.

System	When to Aim	Notes
Millimeter Wave Radar	Millimeter wave radar unit was removed and installed.	
	Millimeter wave radar unit was replaced.	Always order a new replacement radar unit using the VIN.
	After a collision repair that would require at least a front bumper fascia repair within 300 mm of the millimeter wave radar unit.	
	After a collision repair that required a structural body repair.	Structural damage include any damage beyond minor cosmetic abrasions to the welded, riveted, or bonded parts of the main unibody as well as the bumper reinforcements, door intrusion beams, or bolt-on front bulkheads.
	After a Supplemental Restraint System (SRS) deployment.	
	If the following DTCs are set: • **P2583-54** (millimeter wave radar aiming incomplete) • **P2583-64** (millimeter wave radar aiming error) • **P2583-97** (dust or dirt on the millimeter wave radar)	• You must follow the DTC troubleshooting procedure first, and only do the aiming procedure when instructed. • Other DTCs indicated must be corrected prior to aiming; otherwise, the aiming may fail.

System	When to Aim	Notes
Blind Spot Information Radar	BSI radar unit was removed and installed.	
	BSI radar unit was replaced.	If the BSI radar unit was replaced due to damage, you must do the BSI Radar Unit Mounting Area Check procedure before installing the new BSI radar unit.
	After replacing or repairing the body panel(s) where the BSI radar unit is mounted.	You must do the BSI Radar Unit Mounting Area Check procedure after the repair is complete and before installing the BSI unit radar.
	After a collision repair requiring a structural body repair at the rear of the vehicle.	You must do the BSI Radar Unit Mounting Area Check procedure after the repair is complete.
	If the following DTCs are set: • **B18B8** (left side BSI radar unit azimuth off alignment) • **B1E68** (right side BSI radar unit azimuth off alignment)	You must follow the DTC troubleshooting procedure first and only do the aiming inspection when instructed.

System	When to Aim	Notes
Multipurpose Camera or FCW/LDW Camera	Windshield was removed and installed.	
	Windshield was replaced.	The replacement windshield must be a Acura genuine replacement windshield. Installing an aftermarket windshield will cause the aiming to fail or abnormal operation of the driving support system.
	Multipurpose camera unit or FCW/LDW camera unit was removed and installed.	
	Multipurpose camera unit or FCW/LDW camera unit was replaced.	Always order a new replacement camera unit using the VIN.
	After a collision repair requiring a structural body repair.	Structural damage include any damage beyond minor cosmetic abrasions to the welded, riveted, or bonded parts of the main unibody as well as the bumper reinforcements, door intrusion beams, or bolt-on front bulkheads.
	After a Supplemental Restraint System (SRS) deployment.	
	If the following DTCs are set: ***Multipurpose Camera Unit*** • **B2A60-52** (dynamic camera aiming incomplete) • **B2A60-54** (static camera aiming incomplete) ***FCW/LDW Camera Unit*** • **B2A60-54** (FCW/LDW camera unit aiming incomplete) • **B2A60-54** (FCW/LDW camera unit aiming incomplete)	• You must follow the DTC troubleshooting procedure first and only do the aiming procedure when instructed. • Other DTCs indicated must be corrected prior to aiming; otherwise, the aiming may fail.

System	When to Aim	Notes
Multi View Camera	After replacing or removing/reinstalling the following: • Front camera • Rearview camera • Left or right side camera • Power mirror assembly • Mirror housing lower cover (some models) • Front bumper • Front grille • Driver's or front passenger's door • Tailgate • Trunk	Refer to the appropriate model service information for details.
	After adjusting the following: • Driver's or front passenger's door • Tailgate • Trunk	
	After doing any collision repairs to the driver's or front passenger's door.	
	If DTC B14B3-54 (camera aiming incomplete) is set.	

TOOL INFORMATION

Use the table below to ensure you have all the necessary tools to do an aiming procedure. See TOOL IMAGES to ensure you have all the necessary pieces.

Radar Aiming

Radar System	Tool Number	Tool Description	Remarks
Millimeter Wave Radar	07AAJ-STKA210	Alignment Set	
	07AAJ-STKA220	Stand Set	Not available and replaced by Stand Set (T/N: 07AAJ-TK8A100). Includes Reflector Set (T/N: 07AAJ-STKA200).
	07AAJ-TK8A100	Stand	Replaces Stand Set (T/N: 07AAJ-STKA220). Must be used with Reflector Set (T/N: 07AAJ-STKA200).
	07AAJ-STKA200	Reflector Set	Used with Stand Set (T/N: 07AAJ-TK8A100). Can also be used as a replacement for the reflector set included in the Stand Set (T/N: 07AAJ-STKA220).
	07AAG-5R0A100	Gas Strut Holder, Short	Application varies by model.
	N/A	Gas Strut Holder, Long	Included with Alignment Set (T/N 07AAJ-STKA210). Not available separately. Application varies by model.
	07AAA-TGVA100	Radar Adjuster 3.5 mm	Adjustment screwdriver for later Acura models.
BSI Radar	07AAJ-STKA220	Stand Set	Not available and replaced by Stand Set (T/N: 07AAJ-TK8A100).
	07AAJ-TK8A100	Stand Set	Replaces Stand Set (T/N: 07AAJ-STKA220).
	07AAJ-STKA150	Rim Frame	Not available and replaced by Rim Frame (T/N: 07AAJ-TK8A150).
	07AAJ-TK8A150	Rim Frame	
	07AAJ-STKA160	Target Set	Includes straight edge and plumb bob.
	07AAJ-STKA170	Angle Gauge	

NOTES:

- The small bubble gauge used for the millimeter wave radar is included with Alignment Set (T/N 07AAJ-STK210) and is not sold separately. If a replacement is required, it can be purchased at *www.mcmaster.com* under P/N 3338A14.
- The plumb bob used for radar systems is included with Target Set (T/N 07AAJ-STKA160) and is not sold separately. A commercially available plumb bob can be used if a replacement is needed.

Camera Aiming

Camera System	Tool Number	Tool Description	Remarks
Multipurpose Camera	07AAJ-STKA210	Alignment Set	
	07AAJ-STKA220	Stand Set	Not available and replaced by Stand Set (T/N: 07AAJ-TK8A100).
	07AAJ-TK8A100	Stand	Replaces Stand Set (T/N: 07AAJ-STKA220).
	07AAK-5K0A110	Attachment Bracket	
	07AAK-5K0A120	Stand pole	
	07AAB-TYPA020	Target Holder Set	Application varies by model. Refer to the appropriate service information aiming procedure.
	070AK-TYPA030	Target Set	Application varies by model. Refer to the appropriate service information aiming procedure.
	07AAK-5K0A100	Target Set	Includes large bubble level and plumb bob.
	07AAG-5R0A100	Gas Strut Holder, Short	Application varies by model.
	N/A	Gas Strut Holder, Long	Included with Alignment Set (T/N 07AAJ-STKA210). Not available separately. Application varies by model.
FCW/LDW Camera	07AAJ-STKA210	Alignment Set	
	07AAJ-STKA220	Stand Set	Not available and replaced by Stand Set (T/N: 07AAJ-TK8A100).
	07AAJ-TK8A100	Stand	Replaces Stand Set (T/N: 07AAJ-STKA220).
	07AAK-5K0A110	Attachment Bracket	
	07AAK-5K0A120	Stand Pole	
	07AAK-5K0A100	Target Set	Includes large bubble level and plumb bob.
	07AAG-5R0A100	Gas Strut Holder, Short	Application varies by model.
	N/A	Gas Strut Holder, Long	Included with Alignment Set (T/N 07AAJ-STKA210). Not available separately. Application varies by model.

Camera System	Tool Number	Tool Description	Remarks
Multi View Camera System	07AAJ-STKA210	Alignment Set	
	070AK-SLEA110	8 Dot Target Sheet	Contains one target sheet. Aiming requires two.
	070AK-SLEA120	Mask Sheet	Also used for Multi View Camera Picture Inspection.
	07AAG-5R0A100	Gas Strut Holder, Short	Application varies by model.
	N/A	Gas Strut Holder, Long	Included with Alignment Set (T/N 07AAJ-STKA210). Not available separately. Application varies by model.

NOTE: The plumb bob used for some models is included with Target Set (T/N 07AAK-5K0A100) and is not sold separately. A commercially available plumb bob can be used if a replacement is needed.

Supplemental Tools and Materials

In addition to the above Acura special tools, the following tools and materials will be needed:

- Commercially available tape measure with a minimum length of 33 ft (10 m)
- Masking Tape - Acura recommends using the 3M Scotch Blue Painter's Tape
- Marker or Felt-Tip Pen

TOOL IMAGE AND CONTENT

Alignment Set (T/N 07AAJ-STKA210)

Contents	
Centering Stand	Cord
Gas Strut Holder, Long	Small bubble Gauge

Stand Set (T/N 07AAJ-STKA220)

Contents	
PVC Target Stand	Pointer
Reflector	Collar with Plastic Screw

Radar Adjuster 3.5 mm (T/N 07AAA-TGVA100)

Stand (T/N 07AAJ-TK8A100)

Reflector Set (T/N 07AAJ-STKA200)

Contents		
Pointer	Reflector	Collar with Plastic Screw

Rim Frame (T/N 07AAJ-TK8A150)

Target Set (T/N 07AAJ-STKA160)

Contents		
Target	Plumb Bob	Straight Edge

Angle Gauge (T/N 07AAJ-STKA170)

Contents	
Angle Gauge	Laser Pointer with Batteries

Attachment Bracket (T/N 07AAK-5K0A110)

Stand Pole (T/N 07AAK-5K0A120)

NOTE: This tool must be used with stand (T/N 07AAJ-TK8A100).

Target Holder Set (T/N 07AAB-TYPA020)

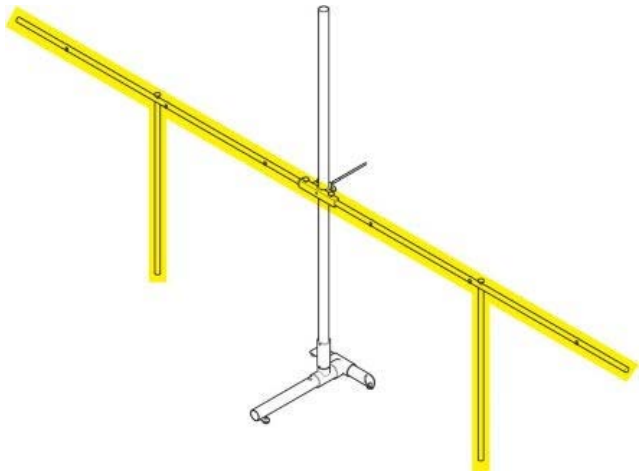

Target Set (T/N 070AK-TYPA030)

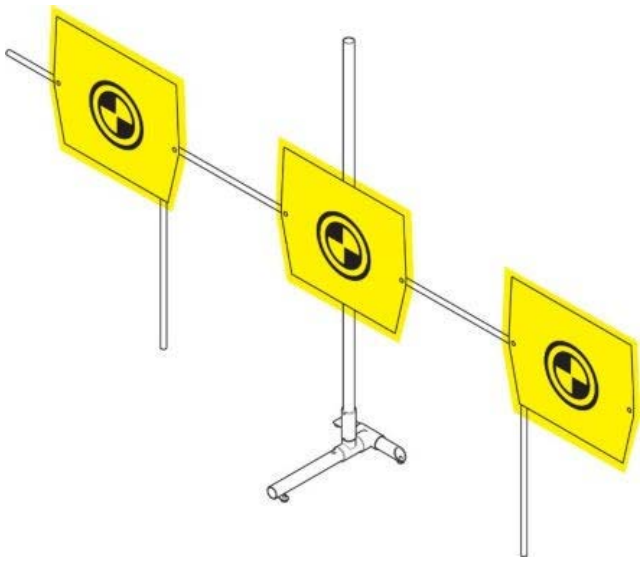

Target Set (T/N 07AAK-5K0A100)

Contents		
Targets	Plumb Bob	Bubble Level

Gas Strut Holder, Short (T/N 07AAG-5R0A100)

NOTE: Gas Strut Holder, Long is similar in appearance.

8 Dot Target Sheet (T/N 070AK-SLEA110)

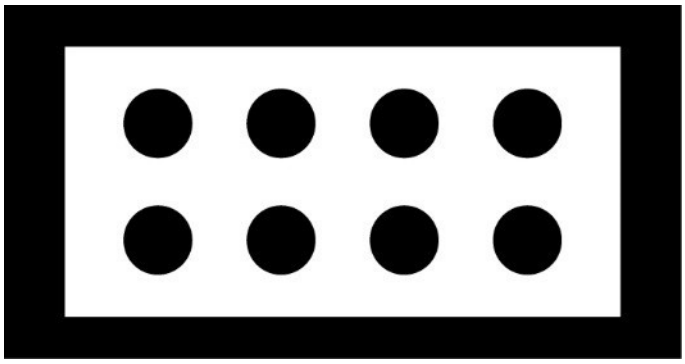

Mask Sheet (T/N 070AK-SLEA120)

AIMING RADAR AND CAMERAS

Millimeter Wave Radar Aiming

To aim the millimeter wave radar, you will need a stationary metal triangle target placed in front of the vehicle and an i-HDS. To complete the aiming process, you must do a vertical and horizontal adjustment.

Vertical Adjustment

There are two ways to complete the vertical adjustment, depending on the model:

- Manual Adjustment without the i-HDS: Use the vertical adjustment bolt and a bubble level mounted on the radar unit to aim the radar. This is done before the target and i-HDS is set up.
- Manual Adjustment Using the i-HDS: Connect the i-HDS, then set up the target when instructed. Use the i-HDS values to aim the radar by turning the vertical adjustment bolt.

Horizontal Adjustment

There are two ways to complete the horizontal adjustment, depending on the model:

- Electronic Adjustment Using the i-HDS: Done after the vertical adjustment (without i-HDS method), the i-HDS electronically aims the horizontal plane. No physical adjustment is needed.
- Manual/Electronic Adjustment Using the i-HDS: Done at the same time as the vertical adjustment. Use the i-HDS values to aim the radar by turning the horizontal adjustment bolt.

FCW/LDW, Multipurpose Camera Aiming

The multipurpose camera requires both static and dynamic aiming using the i-HDS. Static aiming is done with the vehicle stationary and aimed at a stationary target. Vehicles will require either two or three targets depending on the model. Dynamic aiming is done with lane markers on the road while driving.

NOTE: Some later Acura models only require static aiming. Refer to the appropriate service information procedure.

The FCW/LDW cameras are aimed two ways, depending on the model. Some require static and dynamic aiming. Others require strictly dynamic aiming.

Camera System	HDS or i-HDS Required	Static Aiming	Dynamic Aiming	Remarks
Multipurpose Camera	Yes	Yes	Varies by model.	
FCW/LDW Camera	No	No	Yes	2013 ZDX only.
	Yes	Yes	Yes	All models except 2013 ZDX.

Multi View Camera Aiming and Picture Inspection

The four cameras used on the multi view camera system are aimed using a stationary target laid on the floor in the front, rear, and sides of the parked vehicle. The aiming procedure requires the i-HDS and the audio or audio-navigation display.

The aiming procedure is split into four aiming areas: front, rear, left side and right side.

It is not necessary to do the aiming for all cameras at one time. Do the camera aiming that is applicable to the component that was removed, adjusted, or required re-aiming. Below is a general guideline on what camera to aim. Always refer to the applicable service information for conditions.

Component(s) Removed or Adjusted	Camera Aim
Side camera, power mirror, mirror housing lower cover, or front door	Side camera

Component(s) Removed or Adjusted	Camera Aim
Front camera, front bumper, or front grille	Front camera
Rearview camera or tailgate/trunk	Rear camera

If you need to aim all four cameras, aim them in the following order:

1. Front camera
2. Rear camera
3. Side camera, left side
4. Side camera, right side

After any camera aiming, be sure to do the multi view camera picture inspection according to the service information.

BSI Radar Aim Inspection

You must inspect the BSI radar units to ensure they are aimed correctly. This is a static inspection using a laser with targets positioned to the left and right rear of the vehicle. You do not need the i-HDS. If the laser points within the boundaries of the target, the aim is good and the inspection is complete. However, if the lasers do not point within the target area, a secondary inspection is needed to check the radar unit mounting area for damage.

GENERAL AIMING REQUIREMENTS

Although the procedures for radar unit and camera aiming are different, the general aiming requirements are the same. Here are the minimum requirements for both the vehicle and the aiming area.

Vehicle Requirements

- The suspension has not been modified.
- The tire sizes and pressures are correct according to the driver's doorjamb label.
- The fuel tank is full.
- All excess cargo is removed, except for the tool kit and spare tire (if equipped).
- All doors are closed.
- The transmission is in Park (Neutral for M/T models) with the parking brake set.
- The wheels are pointed straight ahead.
- No objects are on the instrument panel, hood, or windshield.
- There is no dirt or debris around the radar unit or camera.

Aiming Area Requirements

- Do the aiming in a well-lit area such as inside the shop. Avoid doing it outside; certain weather conditions may affect aiming results.
- Make sure there is enough space (see below). Avoid areas with poles and large tool boxes nearby. Also, avoid aiming in front of any metal garage doors, shutters, or steel grates in the ground.
- Do not use the listed dimensions for target placement.

Radar, FCW/LDW Camera or Multipurpose Camera Aiming

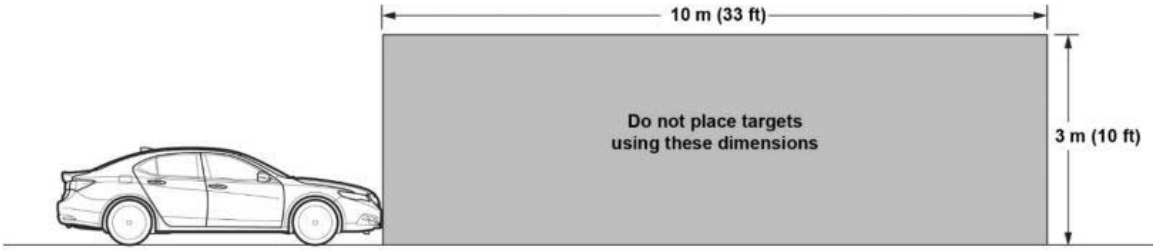

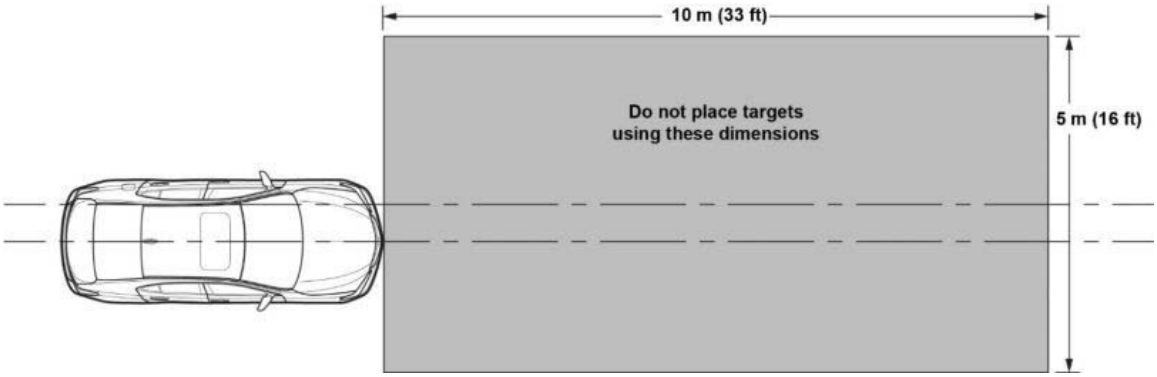

BSI Radar Aiming

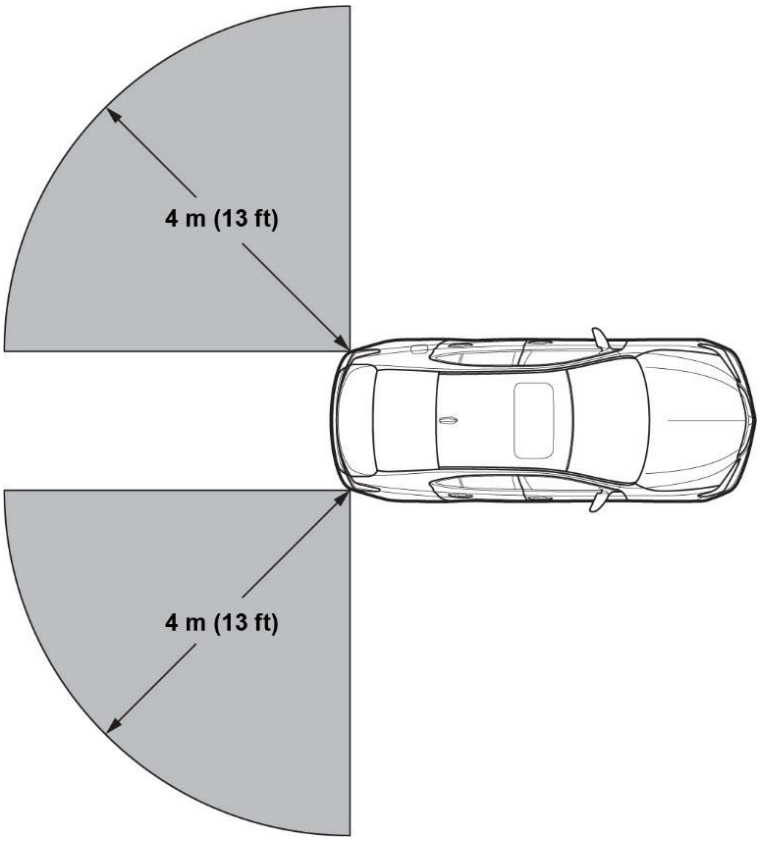

Multi View Camera Aiming

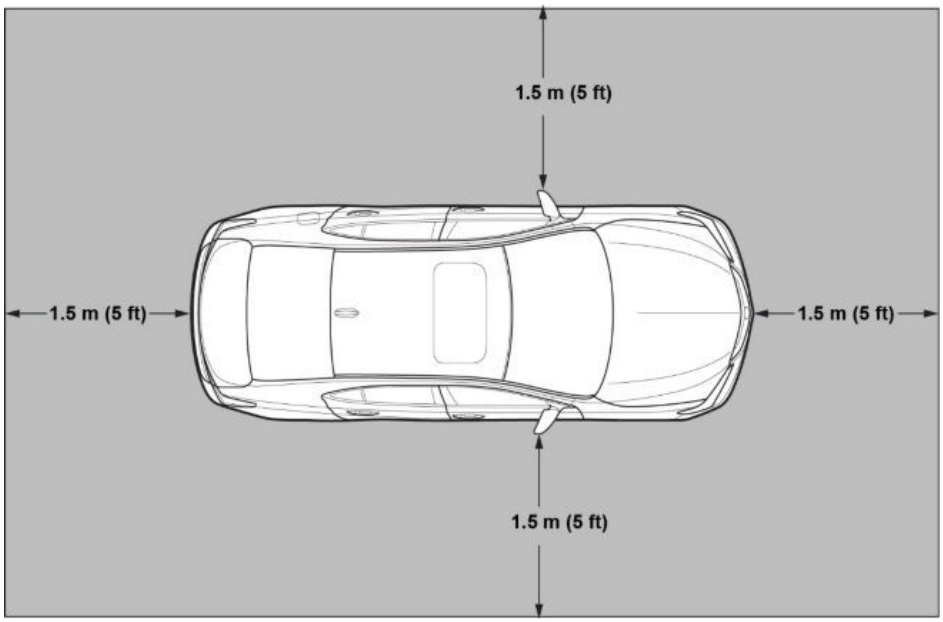

- There should be no bright objects (sunlight, windows, lights, or reflectors) behind or in front of the target or designs similar to the target pattern. Below is an example of an aiming set up that is likely to fail because the sun is behind the target.

SETTING UP THE TARGETS

The target setup procedure depends on the system, but the general procedure for establishing the reference marks for target placement is similar. Here are some key points to remember when setting up the targets.

Finding the Vehicle Center Line

- Except for BSI, you must first find the vehicle center line using the front and rear jacking points or the front Acura emblem.
- When placing a target at front, place the centering stand at the front of the vehicle and the gas strut behind the vehicle.
- When placing a target behind the vehicle, place the centering stand behind the vehicle and the gas strut at the front.

Front and Rear Jacking Points or Rear Tow Hook

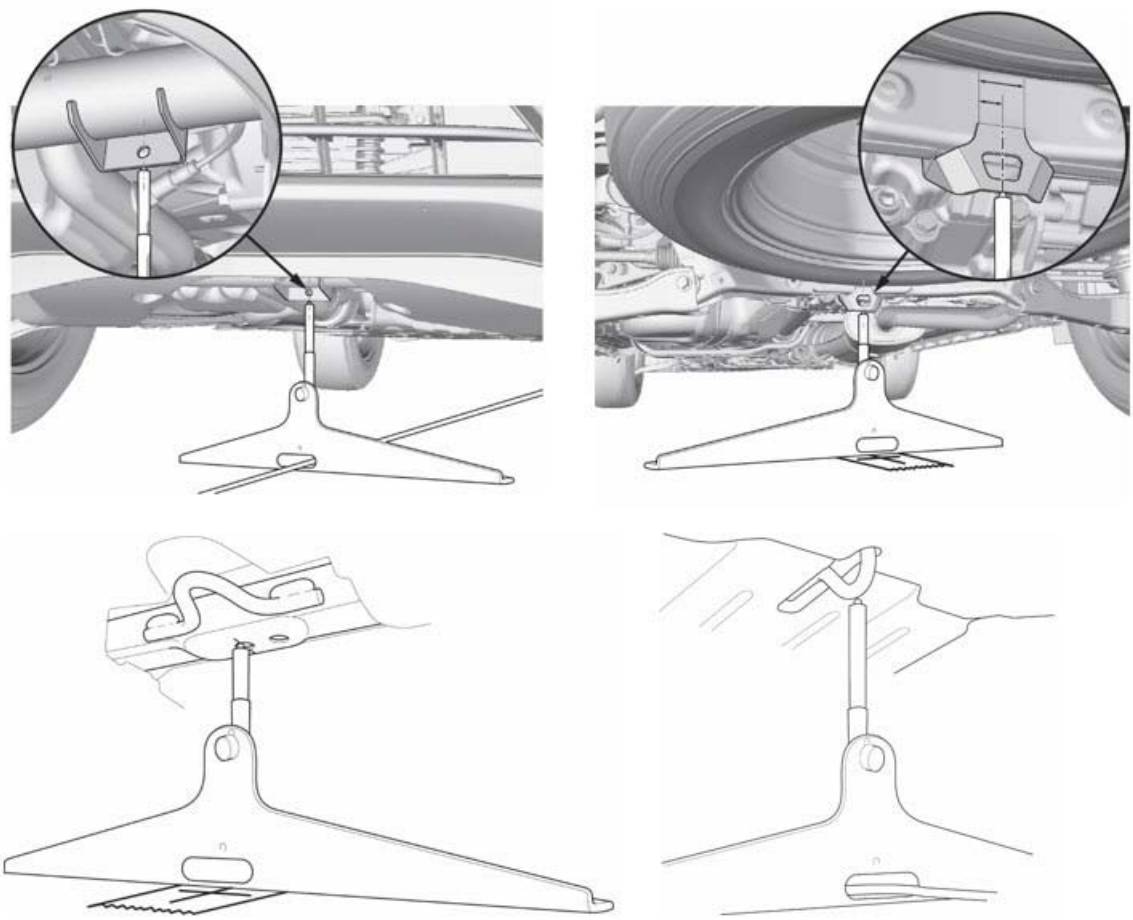

Making the Reference Marks

To correctly aim the millimeter radar unit or camera, you need to establish accurate reference marks. Here are some tips to help you do that.

There are two ways to establish the reference mark to place the targets, depending on the model.

- A reference mark made at the specified distance from the front bumper (front bumper type).

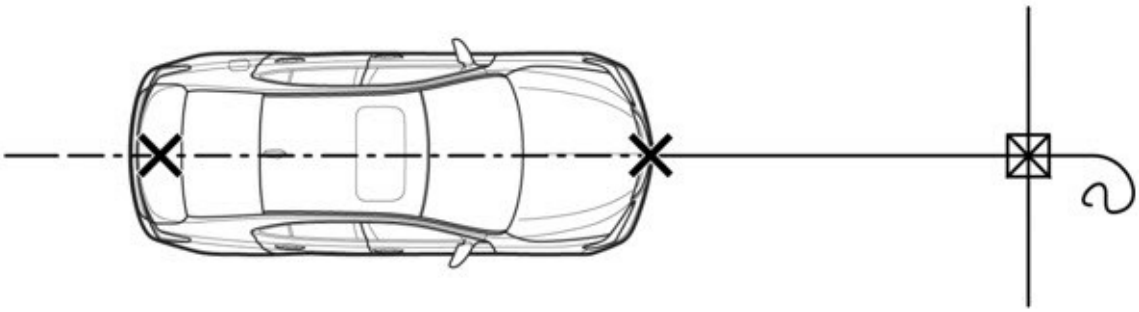

- A reference mark made at the specified distance from the center of the front wheels (wheel centerline type).

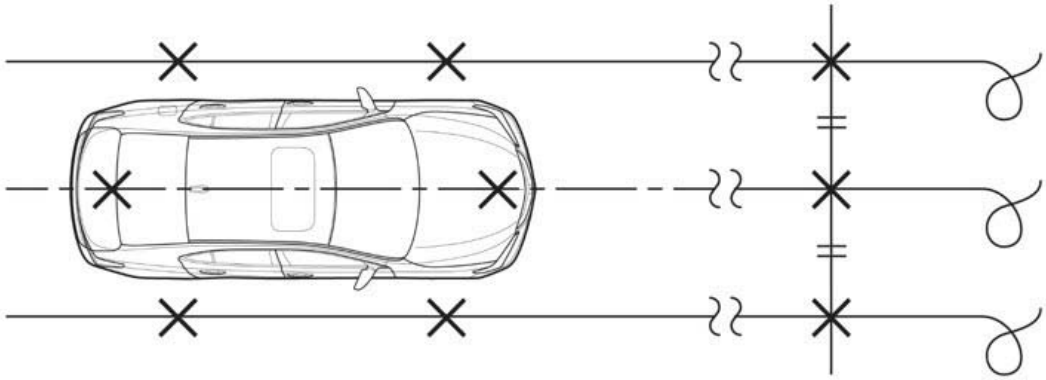

Front Bumper Type

In this example, we are placing the target for the millimeter wave radar unit. You need to make a reference mark in front of the vehicle at the specified distance from the front bumper.

NOTE: The reference point labels may differ by model. Always follow the service information procedures.

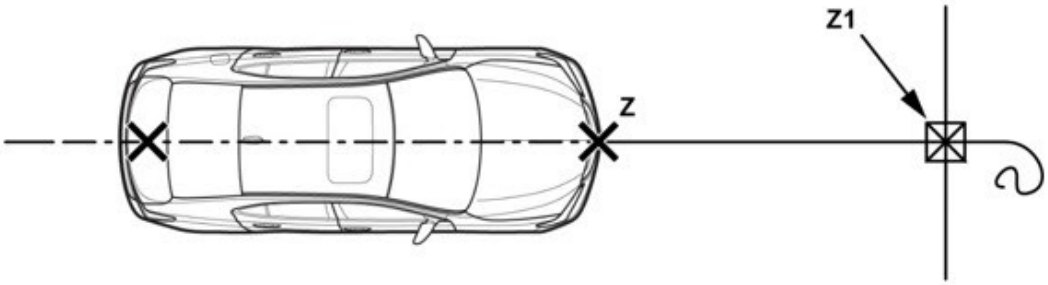

1. Determine the centerline at the rear of the vehicle, and position the gas shock with the cord or string attached. Refer to the procedure Before Aiming Setting in the service information.
2. Hang the plumb bob from the center of the front Acura emblem and make a mark on the floor where the plumb tip contacts it. We will call this mark Z.

   NOTE: If the vehicle has a front license plate, remove the plate and bracket before doing this step.

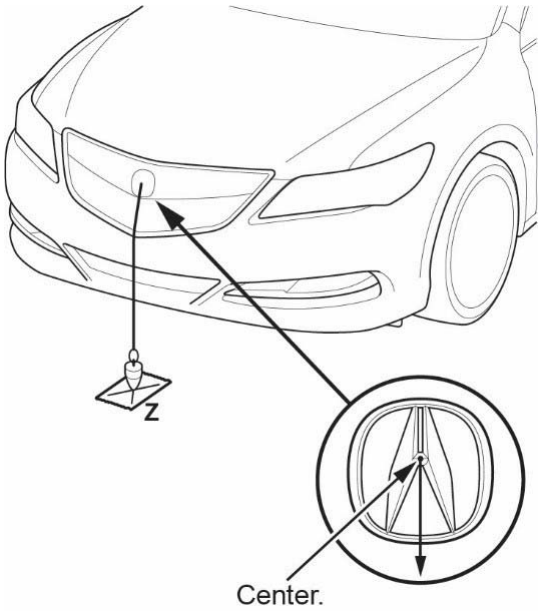

On certain models, you may need to tape the plumb bob string to keep it centered; otherwise, the bumper's center character line may skew the string to the left or right.

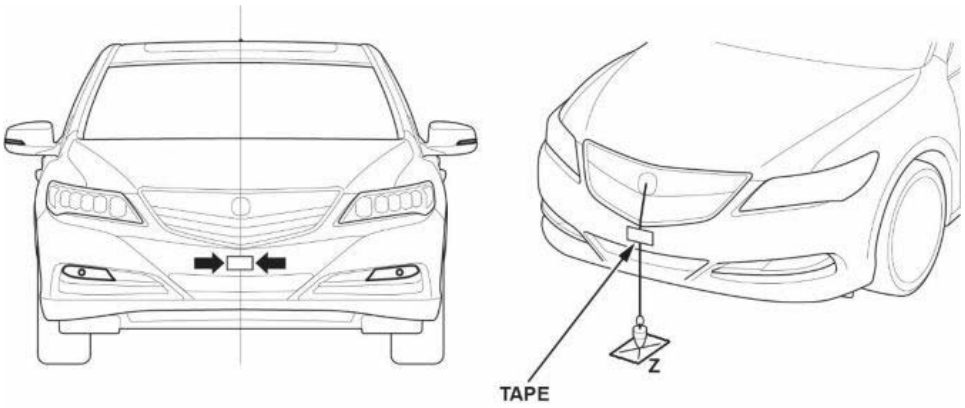

3. Place the centerline of the centering stand from Alignment Set (T/N 07AAJ-STKA210) on mark Z, then run the cord or string through it.

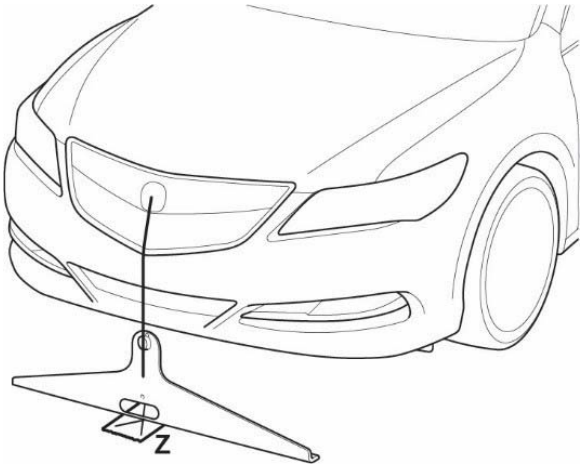

4. With the cord or string centered with the center line of the centering stand, make a new mark Z1 using the listed distance in the service information.

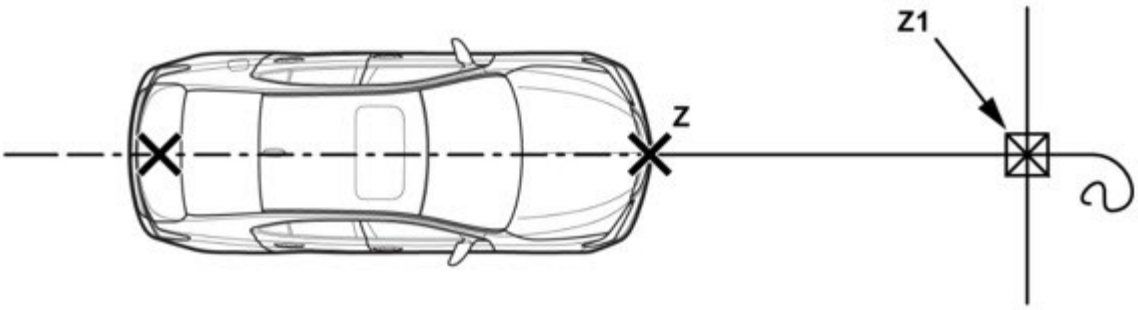

5. The target set up you just completed should match the one in the aiming procedure. You are now ready to set up either the radar or camera target stand.

   NOTE: When doing the millimeter wave radar aiming, do not place the reflector target at mark Z1 until you are instructed by the i-HDS. Failure to do so will result in an aiming failure with an i-HDS message **Detected Some Obstacles**. Refer to Placing the Stand During Millimeter Wave Radar Aiming under TROUBLESHOOTING TIPS.

Wheel Centerline Type

In this example, we are placing the target for the millimeter wave radar unit. You need to make two parallel lines from A1 to C1, then from A2 to C2. Follow this up with a line from C1 to C2.

NOTE: The reference point labels may differ by model. Always follow the service information.

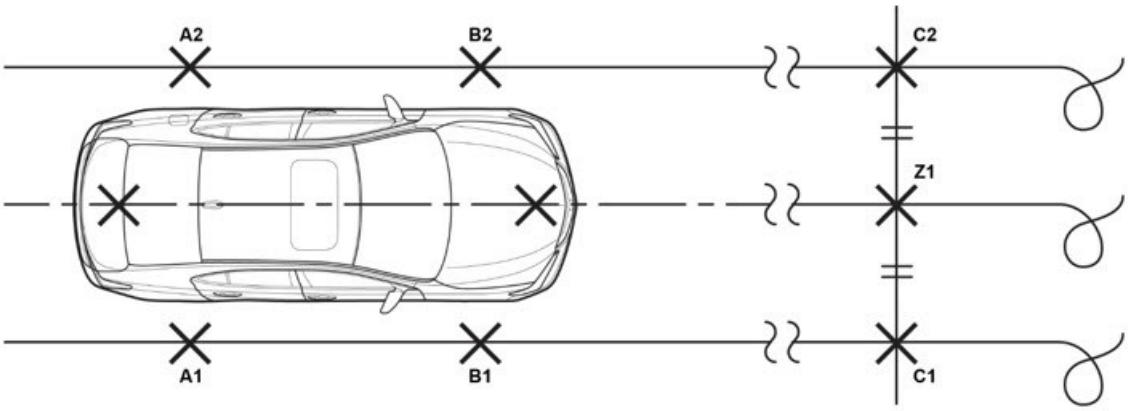

1. Place the centering stand from Alignment Set (T/N 07AAJ-STKA210) at the center of the right-rear wheel. Extend the pointer as much as possible so it reaches the edge of the center cap.

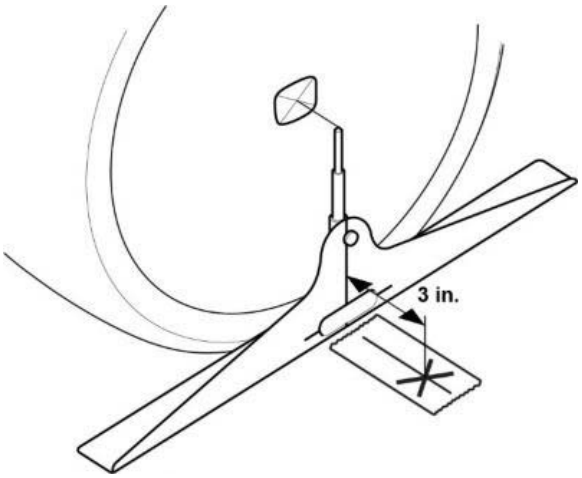

2. Measure 3 inches (76.2 mm) out from the center of the centering stand, and mark it. We will call this mark A1.
3. Do steps 1 and 2 for the remaining wheels, and mark them as B1 for the right-front wheel, A2 for the left-rear wheel, and B2 for the left-front wheel.
4. Determine the centerline at the rear of the vehicle, and position the gas shock with the cord or string attached. Refer to the procedure Before Aiming Setting in the service information.
5. Determine the vehicle's centerline at the front and make a mark. Refer to the procedure Before Aiming Setting in the service information.
6. Place the center of the centering stand at the new mark you just made, and route the cord or string through it.
7. Place the tape measure from A1 (rear wheel) through B1 (front wheel), making sure the inner edge of the tape measure is aligned with the A1 and B1 marks.

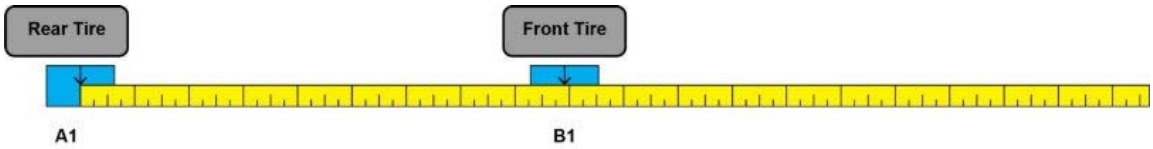

8. Extend the tape measure out roughly 30 ft (9 m) while keeping it as straight as possible and aligned with the marks A1 and B1.

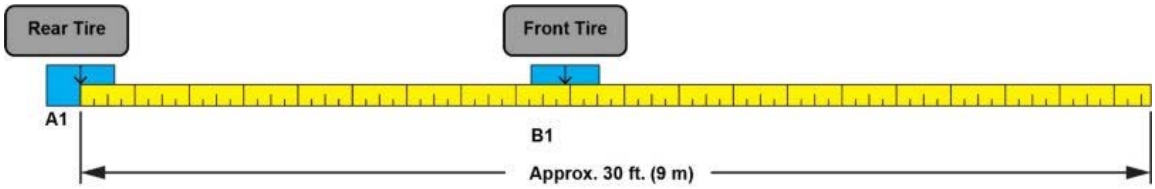

9. Make a new mark on the floor at 28 ft (8.5 m). We will call this mark C1.

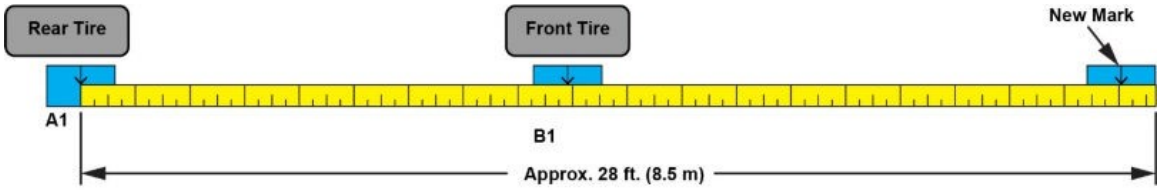

10. Move the start of the tape measure to B1 while aligned with C1, and make a new mark according to the distance listed in the service information procedure.

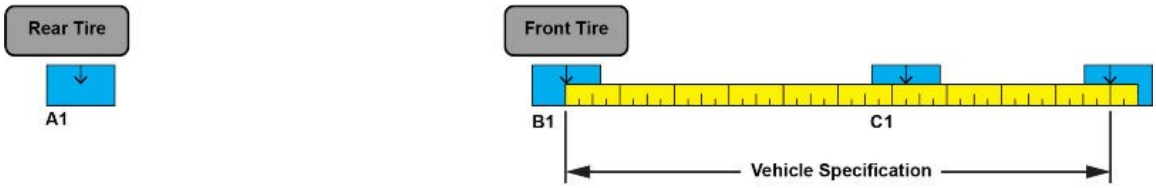

11. Repeat steps 7 thru 10 for the other side.
12. At this point, you should have marks C1 and C2 on the floor. Using your roll of tape, connect them as shown while keeping the tape as straight as possible.

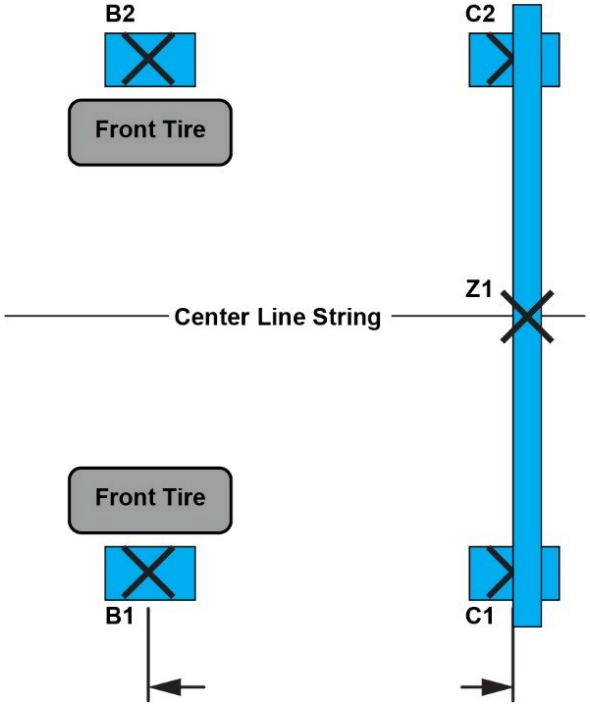

13. Make a new mark where the center line string intersects the tape edge. We will call this mark Z1.This mark should be bold and very visible as you will place the target stand on it later.

14. The target set up you just completed should match the one in the aiming procedure. You are now ready to set up either the radar or camera target stand.

    NOTE: When doing the millimeter wave radar aiming, do not place the reflector target at mark Z1 until you are instructed by the i-HDS. Failure to do so will result in an aiming failure with an i-HDS message **Detected Some Obstacles**. Refer to Placing the Stand During Millimeter Wave Radar Aiming under TROUBLESHOOTING TIPS.

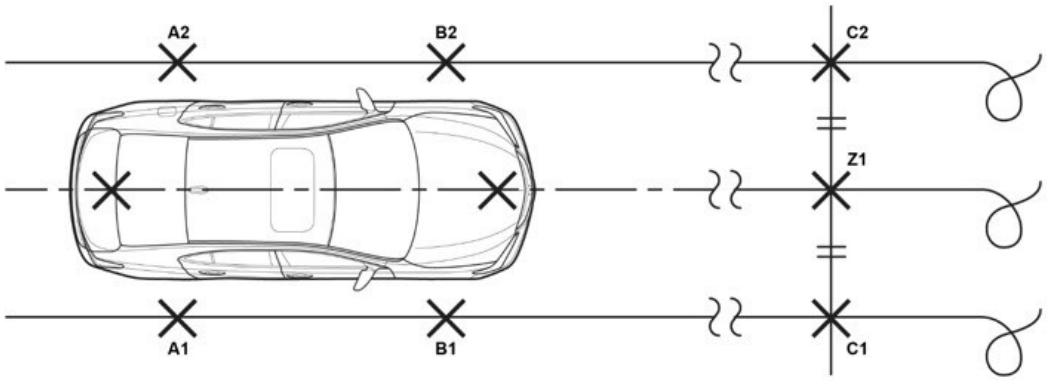

This procedure can also be used when setting up the multi view camera aiming. Use the procedure to set up the reference marks for placing the target sheets on the front, rear, and sides of the vehicle.

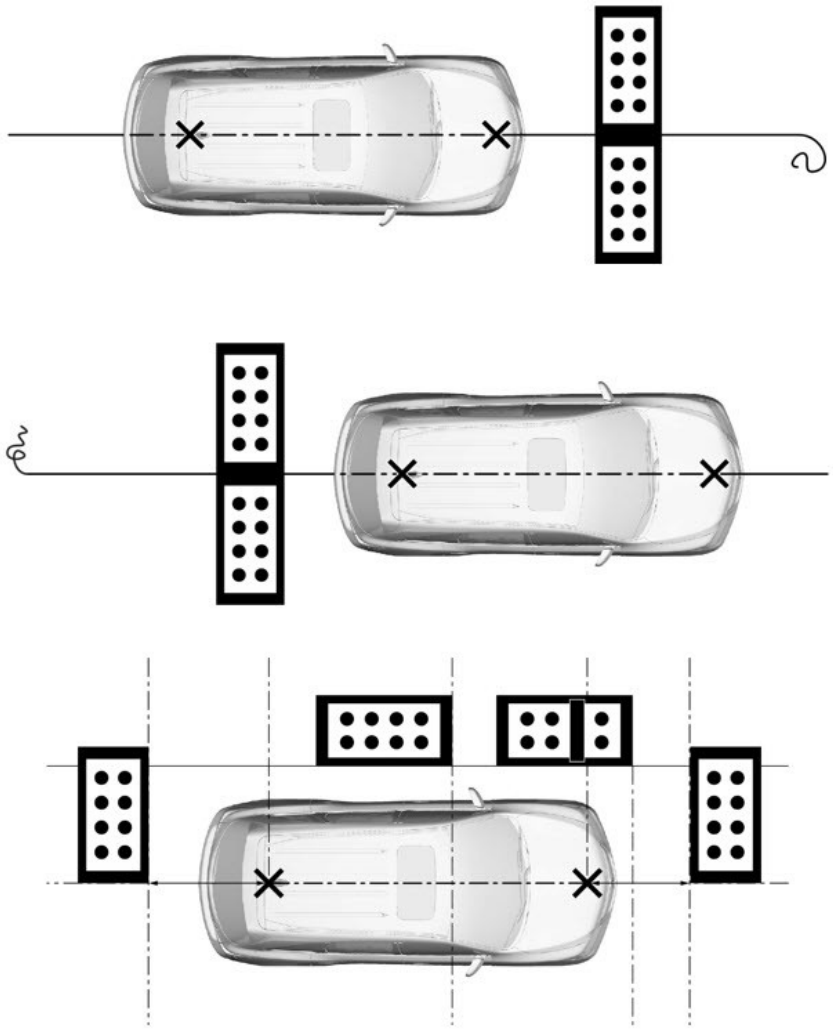

TIPS ON MULTI VIEW CAMERA AIMING

Side Camera Aiming

The service information shows four target sheets in the side camera aiming procedure diagram: one in the front, one in the back, and two on the side. The front and back targets are used only to help make the additional reference lines for the placement of the target sheets on the side of the vehicle.

Example:

1. Place one target in the front and the other in the back as shown.
2. Mark the floor with points V2 (front) and U2 (back) according to the listed specifications in the service information.
3. Stretch a cord or string along points V2 and U2.
4. Using the target at the front, mark the floor with points T and S according to the listed specifications in the service information.
5. Move the targets from the front and rear to the side as shown.

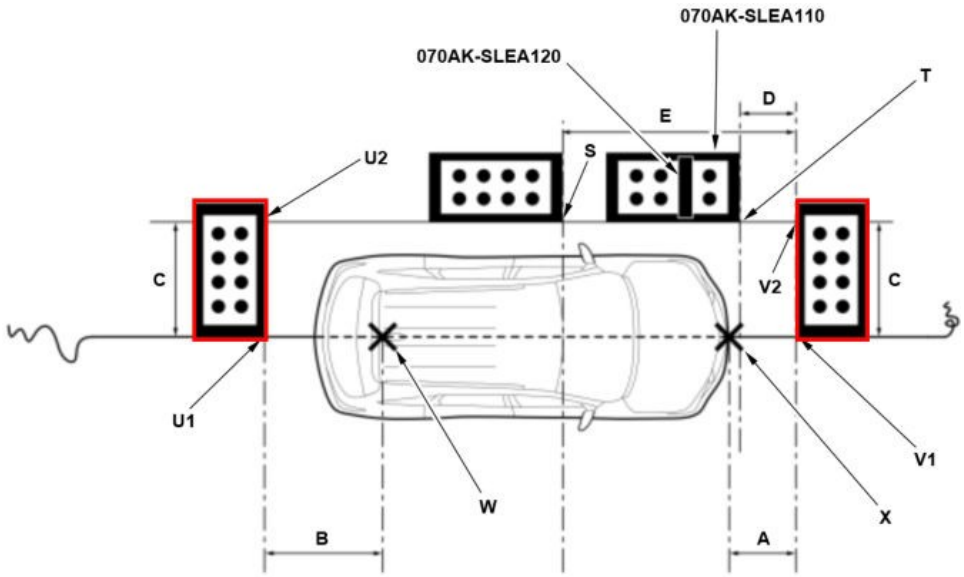

During Aiming

When checking the center display unit during aiming, it is important to understand what you are checking.

This image is what you would normally see on the center display unit for the front camera.

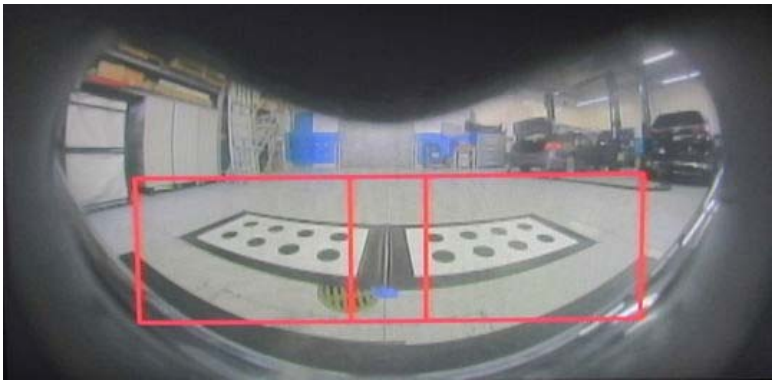

When you see the message **Please confirm navigation monitor. Is marker in aiming area?** on the i-HDS, it is important to understand how to interpret the image. In the image below, it appears there are three boxes: one on the left, one on the right, and one in the center.

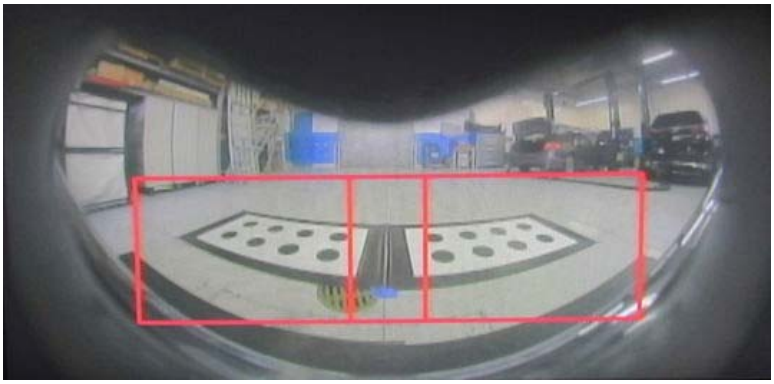

However, these are actually two boxes overlapping each other, and they must be treated as two separate boxes.

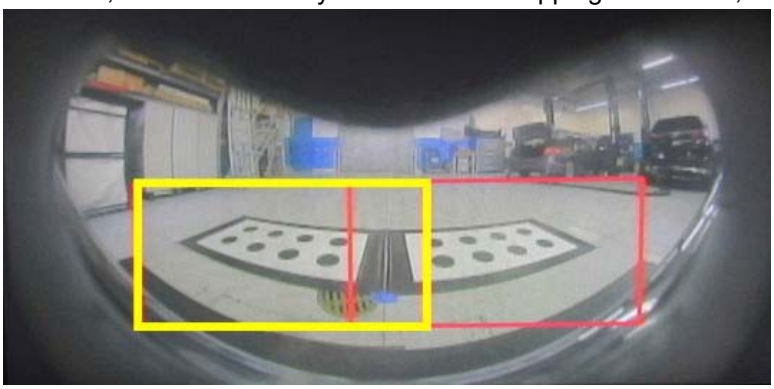

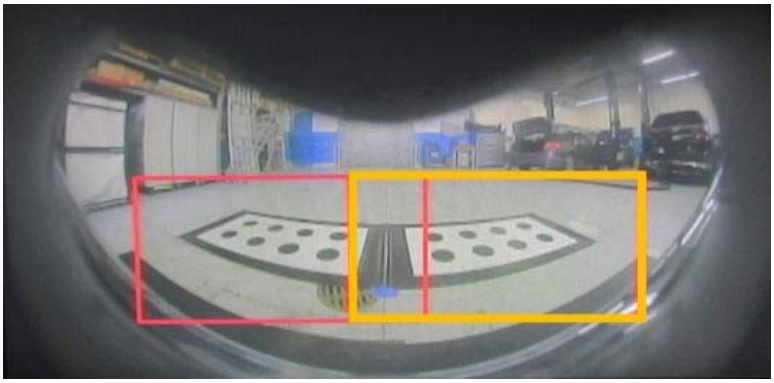

The same applies for the front camera.

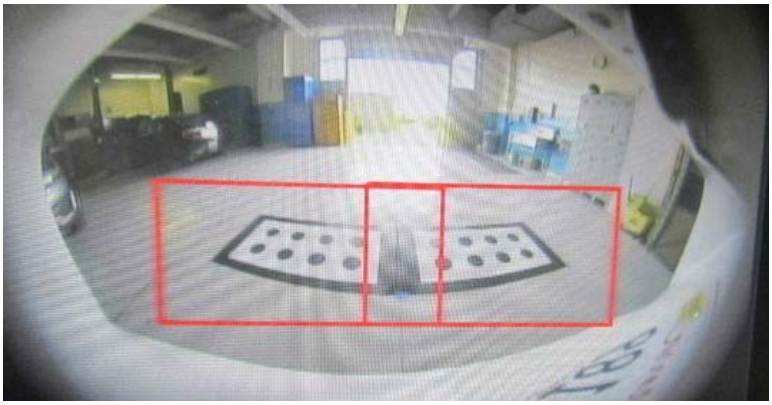

The same applies for the side cameras.

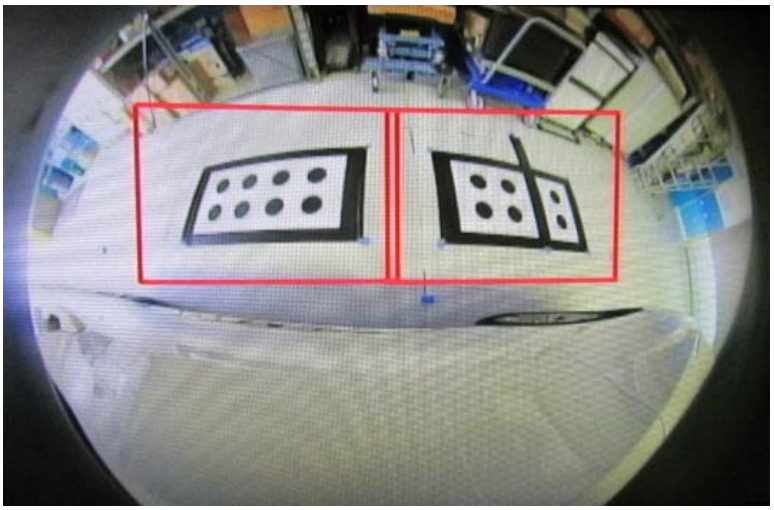

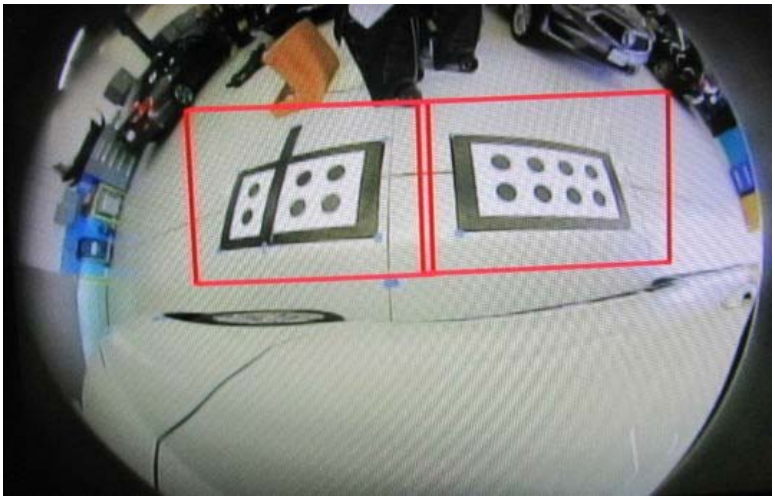

Lastly, it is not necessary to do all of the multi view camera aiming procedures listed in the service information. Do only the one that is applicable to the component that was removed or adjusted.

TROUBLESHOOTING TIPS

Here are some general troubleshooting tips if the radar unit or camera aiming fails. Before doing any troubleshooting, always make sure you have met the vehicle and aiming area requirements and the targets are set up correctly according to this job aid and the service information.

Obstructed Radar View

Besides dirt and debris on the radar unit cover, front Acura emblem, or front grille, other factors can obstruct the radar unit view that will affect millimeter wave radar unit aiming.

- Always make sure the correct replacement parts are installed. Depending on the trim level, the grille or the front Acura emblem base is different and will obstruct the radar view if the wrong one is installed.
- Check for radar covers that are painted or have exterior wraps. These covers should never be painted or wrapped with exterior covering as it will obstruct the radar view. This also applies to the front grille.

Placing the Stand During Millimeter Wave Radar Aiming

When aiming the millimeter wave radar, keep the stand away from the aiming area and do not place it on the specified mark until you are instructed by the i-HDS. This is typically after the MID displays the message **NO TARGET**. The i-HDS and the millimeter wave radar unit checks the space in front of the vehicle to make sure there are no reflective objects. If the i-HDS detects any reflective objects or the stand, it will prompt a warning message and you must restart the procedure.

Distorted or Blocked Camera View

The multipurpose and FCW/LDW cameras must be aimed after the front windshield is removed or replaced. Always make sure the installed windshield is a correct factory replacement for the vehicle and not an aftermarket. The windshield for camera-equipped vehicles has view windows toward the top of the glass for the camera's view. Aftermarket windshields may have distortion within the glass that may cause interference of the camera.

Wrong Target Patterns

If you get the message **Cannot Detect Right Target** or **Cannot Detect Left Target** on the i-HDS screen when using Target Set (T/N 07AAK-5K0A100), you may have the targets installed incorrectly. Make sure the target patterns match the illustration shown in the service information. If they are incorrect, correct the target orientation and make sure to check the target height and positions again.

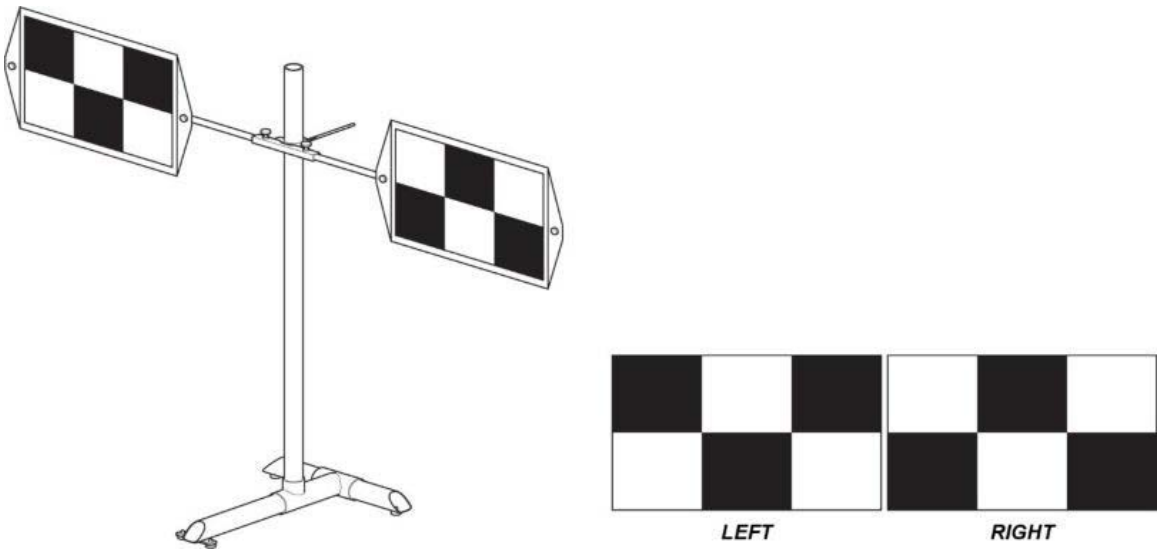

Unable to Aim the Multi View Camera

If you are unable to aim the multi view camera, there may be an unwanted light source creating a reflection or glare on the targets.

NOTE: The example shown below has a clearly visible reflection or glare. Other reflections may not be as obvious.

Reflection or glare on the target dots

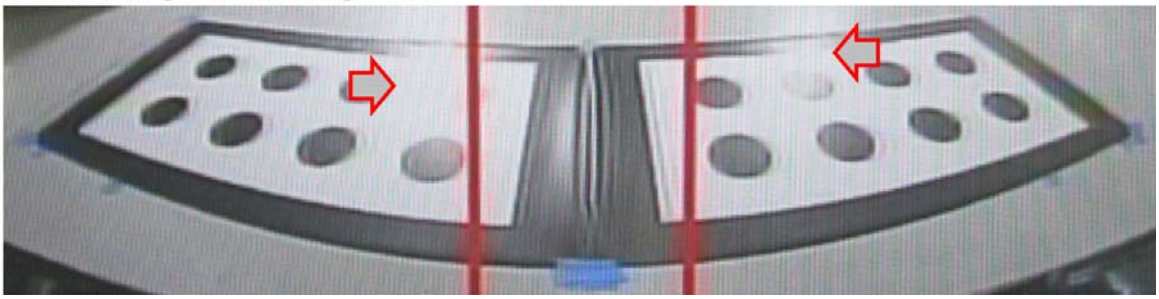

Do one or all of the following, and do the camera aiming again:

- Check the placement of the targets again, and make sure it is in the correct position.
- If possible, temporarily turn off any shop lights.
- Close any shop windows or roll doors.

If you still cannot do the camera aiming after trying all of the above, do the following:

1. Grab several large boxes from your parts department.
2. Place the boxes around the perimeter of the targets as shown.

   NOTE: This example shows the boxes being placed around the front targets.

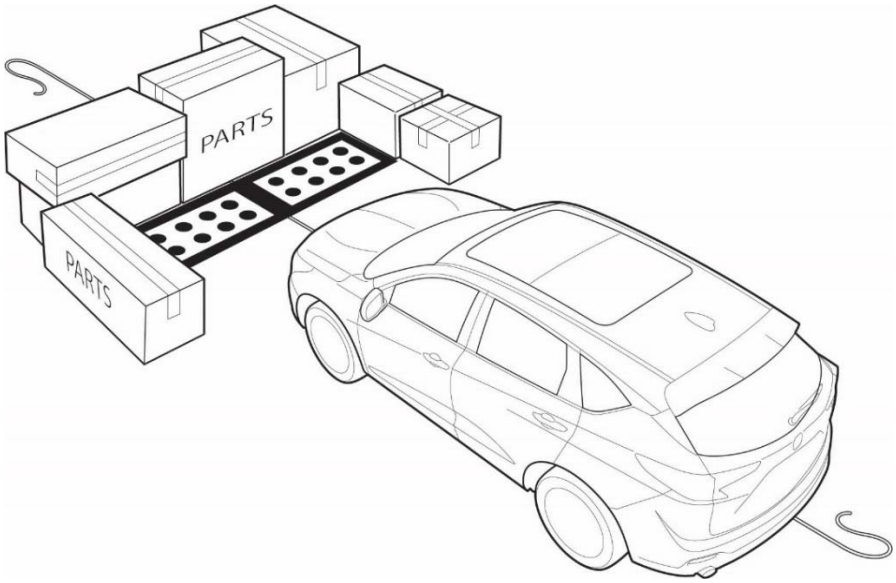

With the help of an assistant, large cardboard pieces such as an accessory floor mat box can be used.

NOTE: This example shows the floor mat boxes being placed behind the rear targets.

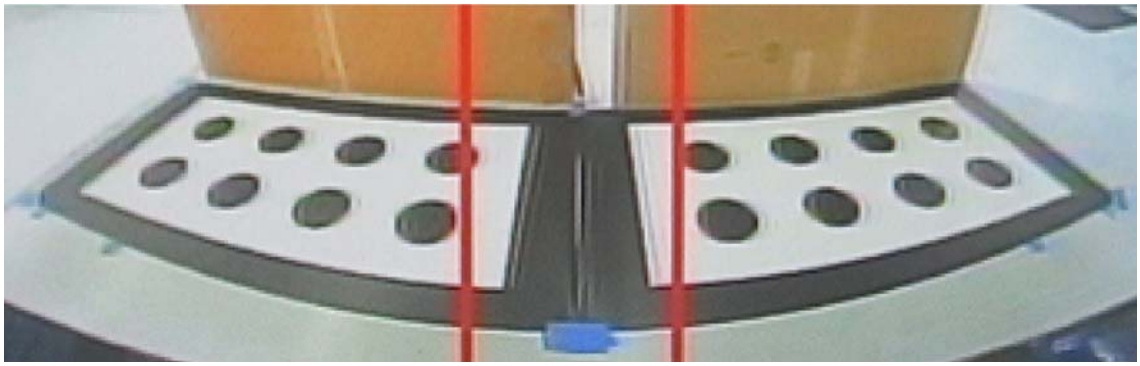

3. Do the camera aiming again.

   NOTE: It may be necessary to turn the shops light on or off to further control the reflection or glare, even after placing the cardboard around the targets.

Collision Repairs

Any vehicle that was involved in a collision must have a wheel alignment completed before aiming.

If you have trouble aiming the millimeter wave radar unit on a vehicle that recently had collision repair, check the following:

- If the radar unit was replaced, you must check the distance from the radar unit to the bracket and adjust as needed using the adjusting bolts. See Millimeter Wave Radar Removal and Installation in the service information for details on how to do this.
- If the radar unit was not replaced, before you start radar unit aiming, you must still check the mounting position of the radar unit bracket to the vehicle frame. See Millimeter Wave Radar Mounting Position Inspection in the service information. In certain light collisions, the radar unit bracket can get slightly bent where it goes unnoticed in a visual inspection, but is enough to cause the radar unit aiming to fail.
- Make sure the wheel alignment is done before aiming the driving support system after a collision repair.

System Limitations

Always remember that certain environmental and roadway conditions can affect normal operation of radar and camera systems during use or when doing dynamic aiming. Conditions can include the following:

- ***Environmental Conditions***
  - Bad weather such as rain, fog, snow, etc.
  - Sudden changes between light and dark, such as an entrance or exit of a tunnel.
  - Little contrast between objects and the background.
  - Driving into low sunlight (at dawn or dusk).
  - Strong light reflected onto the roadway.
  - Driving in the shadows of trees, buildings, etc.
  - Roadway objects or structures misinterpreted as vehicles and pedestrians.
  - Reflections on the interior of the windshield.
  - Driving at night or in a dark condition such as a tunnel.
- ***Roadway Conditions***
  - Driving on a snowy or wet roadway (obscured lane marking, vehicle tracks, reflected lights, road spray, high contrast).
  - Driving on curvy, winding, or undulating roads.
  - Hilly road or approaching the crest of a hill.

Refer to the vehicle owner's manual for additional conditions and limitations for each driving support feature.

END